12VDC 9 OUTPUT SWITCH MODE CCTV POWER SUPPLY

Model: XC-20509

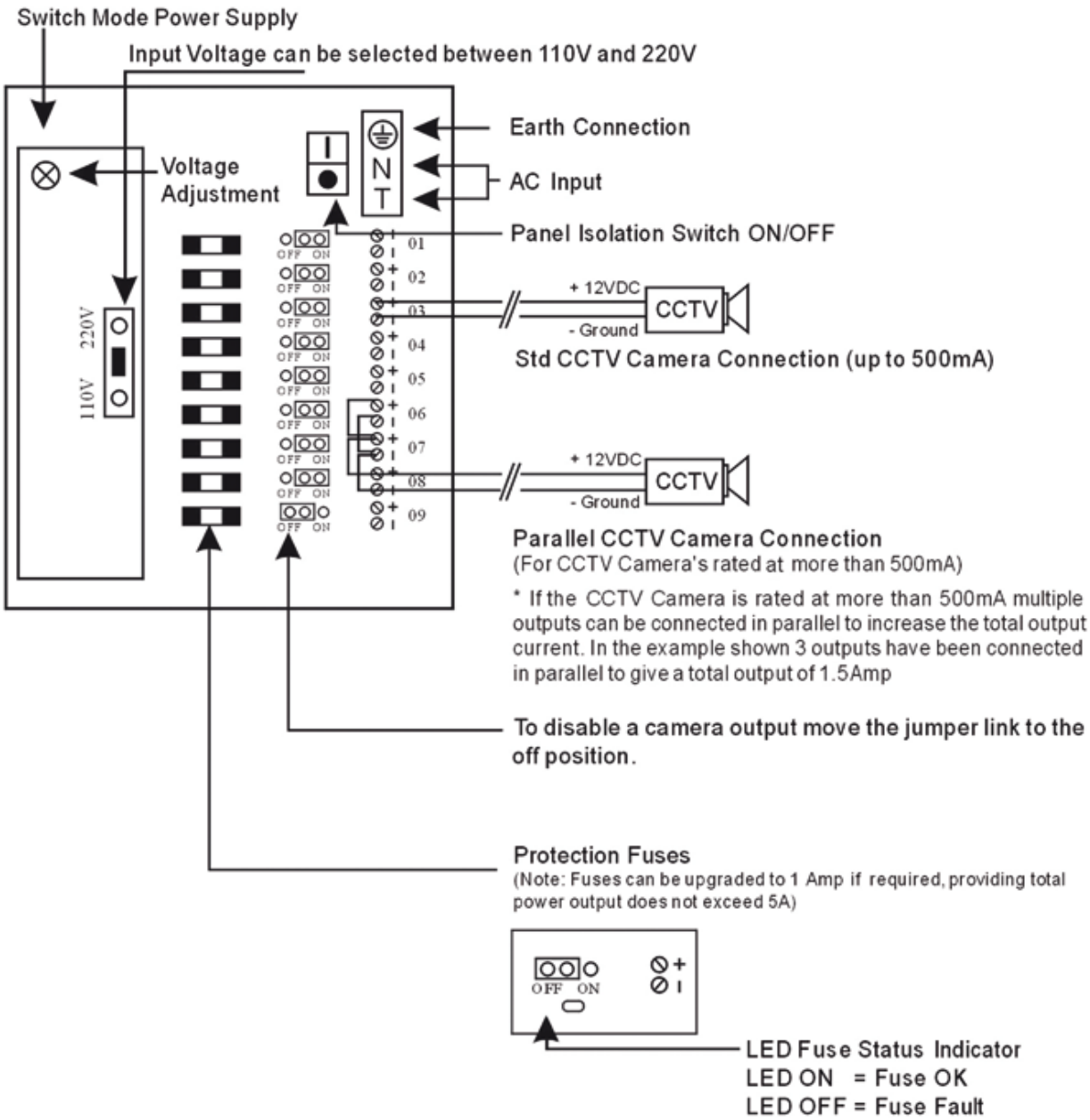

Copyright © 2009